普 晟 PROSENSE

Product Data Sheet

FC7-CO-1000
Electrochemical CO Sensor

FC7-CO-1000 Electrochemical CO Sensor



Key Features & Benefits

*0 Power Consumption
*High Precision
* High sensitivity
*Wide Linear Range
*Excellent Repeatability and Stability

Applications

Energy，Electric Power，Petrochemical，Environmental Protection，Mining，Agriculture，Smart Home, etc.

Technical Specification

MEASUREMENT

Principle	Micro fuel cell
Range	0-1000ppm
Maximum Overload	2000ppm
Sensitivity	1.5±1 (nA/ppm)
Response Time (T90)	＜30seconds
Baseline Offset（20℃）	±5ppm
Zero Drift（-20℃-40℃）	±10ppm
Repeatability	2% of signal
Output Signal	Linear
Long Term Output Drift	＜3% signal/year

ENVIRONMENTAL

Working Temperature Range	-40℃～70℃
Working Pressure Range	90 ～ 110 kPa
Working Humidity Range	10%－90% (not condensing)

LIFETIME

Expected Operating Life	5 years in air
Warranty	24 months

PHYSICAL CHARACTERISTICS

Weight	12 g
Orientation Sensitivity	None

Product Dimension

A

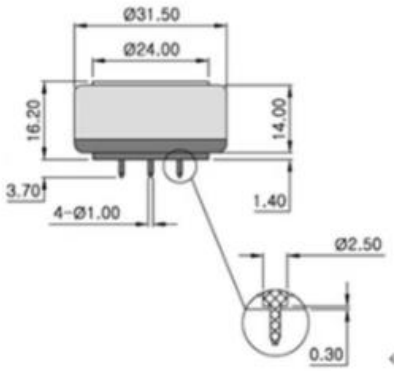

B

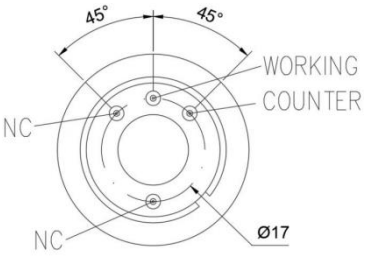

Notes：1 All dimensions in mm
2 All tolerances ±0.15mm unless otherwise stated.

FC7-CO-1000 Electrochemical CO Sensor

Cross-Sensitivity Data

Notes: 1. All performance data is based on condition at 20℃, 50%RH & 1013mbar.For sensor performance data under other conditions, please contact us.

2. Connection should be made via PCB sockets only. Soldering to the pins will seriously damage the sensor

Gas	Concentration Used（ppm）	FC7-CO-1000（ppm CO）
H2	100	30
H2S	50	＜3

Recommend Circuit

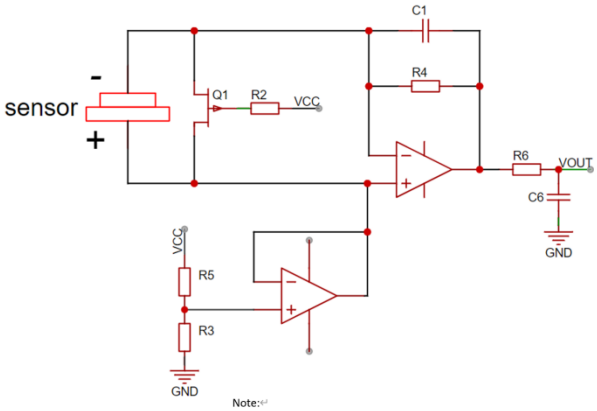

Note:

1. ReH2mmendation for VCC is 3.3V
2. R3&R5 help settle Vref, typical values:
Vref=0.148mV; R3=47K/0.1%;R5=1M/0.1%
3. R2 is reH2mmended as 1M/1%
4. R4 is reH2mmended as 1M/1%
5. C1 is reH2mmended as 10uf with TP5552 as the amplifier
6. Typical values forR6 and C6 are 1K/1% and 100nf/10% separately.

Precautions：

1 .The sensor should be prevented from organic solvents or corrosive gases

2 .The sensor should not be stored in dusty, dirty areas and anaerobic environment

3 .The sensor must not be exposed to very high concentration of the analyte permanantly

4 .Excessive shock or vibration should be prevented to avoid internal damage

5 .The pins should not be broken or bent

普 | 晟 | PROSENSE
ProSense Technologies Co,.Ltd
Add: Building 4, LianJian S&T Park, Longhua District, Shenzhen, China
Tel:+86-755-36690079 Web: www.szprosense.com
E-mail: sales@szprosense.com