Dart Sensors WZ-S formaldehyde module

Operation Manual

DART SENSORS

ProSense Technologies Co., Ltd.

Brief Introduction

WZ-S formaldehyde module from global detection expert DART SENSORS combines novel HCHO sensor with advanced electronic control technology, converting HCHO concentration into PPM directly. Once HCHO arrives at working electrode (anode) it is oxidized instantaneously to generate an electrical signal. The electrical signal is then acquired and processed by microprocessor into a PPM value and is output by standard digital signal. WZ-S HCHO module is pre-calibrated in the factory and can be integrated into your system directly.

Typical Applications

Smart home

Portable devices

Wearable devices

Air conditioners

Air cleaners

... …

Key Features

High precision

Fast response

Long service life

Low power consumption

High stability

Pre-calibrated

Diagram

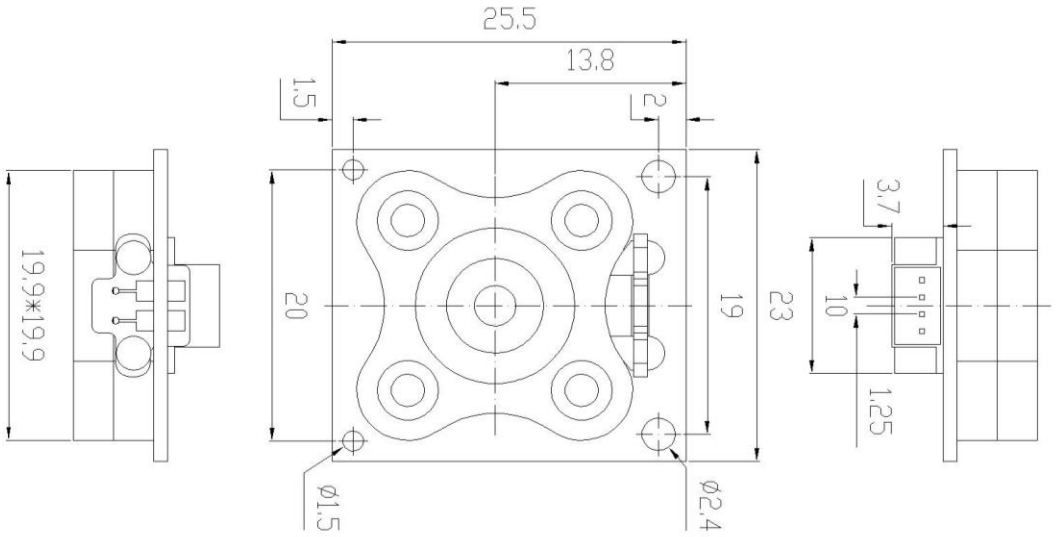

Definition of Pins

PIN	DEFINITION
Pin1	Vin(5V)
Pin2	GND
Pin3	RXD (0～3.3V data input)
Pin4	TXD(0～3.3V data output)



Technical Specification

MODEL	WZ-S
Detection Principle	Micro fuel cell
Detectable Gas	HCHO
Detection Range	0-2ppm
Overload	10ppm
Input Voltage	5-7V
Warm up time	<3min
Response Time (T90)	<40S
Recovery Time (T10)	<60S
Resolution	0.01ppm
Operating temperature range	-20℃～50℃
Operating Humidity Range	10％－90％RH（non-condense）
Lifetime	5 years in air
Warranty Period	12 months
Weight	4g

DART SENSORS

Communication Protocol

- **General Settings**

  Module makes use of serial communication.

  Communication configuration parameters are:

Baud rate	9600
Data bits	8 bits
Stop bit	1 bit
Parity bit	None

- **Communication Command**

There are two communication types: active upload type and Q&A type. The default type is active upload and it sends gas concentration once every second. Commands are as follow:

0	1	2	3	4	5	6	7	8
Start	Gas	Unit ppb	No decimal byte	Concentration (High byte)	Concentration (low byte)	Full range (high byte)	Full range (low byte)	Check sum
0xFF	CH2O=0x17	Ppb=0x04	0x00	0x00	0x25	0x07	0xD0	0x25

Gas concentration = concentration (high byte)*256 + concentration (low byte)

Switch to Q&A mode：

0	1	2	3	4	5	6	7	8
Start	Reserved	Switch command	Q&A	Reserved	Reserved	Reserved	Reserved	Checksum
0xFF	0x01	0x78	0x41	0x00	0x00	0x00	0x00	0x46

Switch to active upload mode：

0	1	2	3	4	5	6	7	8
Start	Reserved	Switch command	Active upload	Reserved	Reserved	Reserved	Reserved	Checksum
0xFF	0x01	0x78	0x40	0x00	0x00	0x00	0x00	0x47

To read gas concentration：

0	1	2	3	4	5	6	7	8
Start	Reserved	Command	Reserved	Reserved	Reserved	Reserved	Reserved	Checksum
0xFF	0x01	0x86	0x00	0x00	0x00	0x00	0x00	0x79

To return:

0	1	2	3	4	5	6	7	8
Start	Command	Concentration (High byte) （ug/m3）	Concentration (low byte) （ug/m3）	Reserved	Reserved	Concentration (High byte) （ppb）	Concentration (low byte) （ppb）	Checksum
0xFF	0x86	0x00	0x2A	0x00	0x00	0x00	0x20	0x30

Gas concentration = concentration (high byte)*256 + concentration (low byte)

DART SENSORS

Checksum calibration

```
/*****************************************************************************
*Function name：unsigned char FucCheckSum(uchar *i,ucharln)
*Function description：checksum calibration[Take Not(Byte1+Byte2+…Byte7) +1]
*Note：Take Not(Byte1+Byte2+…ByteX (X>2)
*****************************************************************************/
unsigned char FucCheckSum(unsigned char *i, unsigned char ln)
{
    unsigned char j, tempq=0;
    i+=1;
    for(j=0; j<(ln-2); j++)
    {
        tempq+=*i;
        i++;
    }
    tempq=(~tempq)+1;
    return(tempq);
}
```

Notes

- Avoid changing or moving sensor on the module.
- Avoid moving or changing electronic elements on PCB.
- Avoid exposure to organic vapour, organic solvent、high gas concentration.
- Protect from excessive vibration and shock.

  No recommended for industrial safety/personal monitoring, refer to 2-FP5.

DART SENSORS

普 晟 PRO SENSE **ProSense Technologies Co., Ltd.**

Add:Building4, Lianjian S&T Park, Longhua District, Shenzhen, China;
Tel: +86 755 3669 0079 Website: http://www.szprosense.com
Email: sales@szprosense.com