PS-H_2S-2 Hydrogen Sulphide Module



PROSENSE

ProSense Technologies Co., Ltd.

Brief Introduction

PS-H2S-2 hydrogen sulphide module combines selective H_2S sensor with high accuracy and advanced electronic control technology, converting H_2S concentration into PPM directly. PS-H_2S-2 selective H_2S module with high accuracy can be applied in smart toilets / smart home / aquatic farm and other cases where detection of H_2S at very low level is required. PS-H_2S-2 selective H_2S module is pre-calibrated in the factory and can be integrated into your system directly.

Typical Applications

Smart Toilets

Portable devices

Wearable devices

Aquatic farm

Green building

Smart home

… …

Key Features

High Accuracy

High precision

Fast response

Long service life

Selective detection

High stability

Diagram

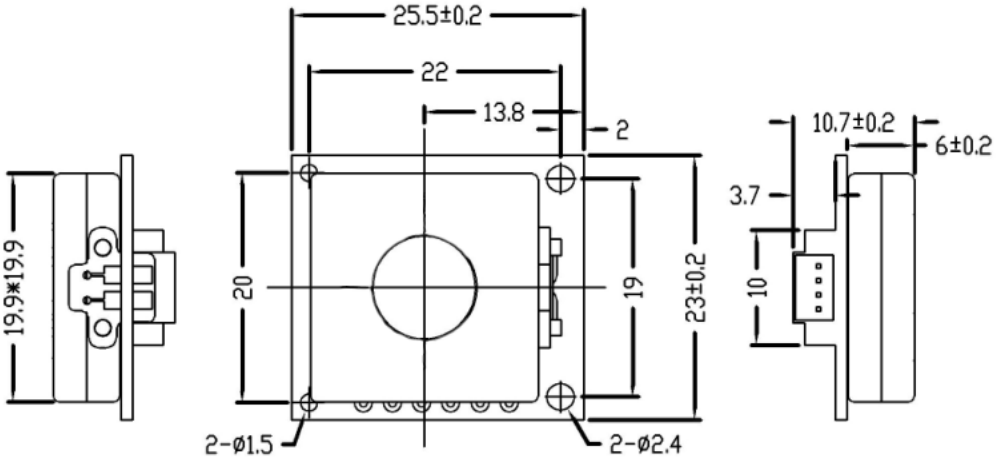

Definition of Pins

PIN	DEFINITION
Pin1	Vin(5V)
Pin2	GND
Pin3	RXD (0～3.3V data input)
Pin4	TXD(0～3.3V data output)

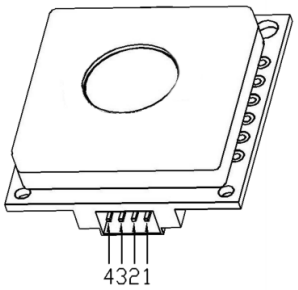

Technical Specification

MODEL	PS-H_2S-2
Detection Principle	Micro fuel cell
Detectable Gas	H_2S
Detection Range	0-2ppm
Overload	5ppm
Input Voltage	4.5-7V
Response Time (T90)	<15S
Resolution	0.001ppm
Operating temperature range	-40℃～70℃
Operating Humidity Range	10％－90％RH（non-condense）
Lifetime	5 years in air
Warranty Period	12 months
Weight	4g

Communication Protocol

- **General Settings**

  Module makes use of serial communication.

  Communication configuration parameters are:

PROSENSE

Baud rate	9600
Data bits	8 bits
Stop bit	1 bit
Parity bit	None

➢ **Communication Command**

There are two communication types: active upload type and Q&A type. The default type is active upload and it sends gas concentration once every second. Commands are as follow:

0	1	2	3	4	5	6	7	8
Start	Gas	Unit ppb	No decimal byte	Concentration (High byte)	Concentration (low byte)	Full range (high byte)	Full range (low byte)	Check sum
0xFF	H2S=0x17	Ppb=0x04	0x00	0x00	0x25	0xXX	0xXX	0x25

Gas concentration = concentration (high byte)*256 + concentration (low byte)

Switch to Q&A mode：

0	1	2	3	4	5	6	7	8
Start	Reserved	Switch command	Q&A	Reserved	Reserved	Reserved	Reserved	Checksum
0xFF	0x01	0x78	0x41	0x00	0x00	0x00	0x00	0x46

Switch to active upload mode：

0	1	2	3	4	5	6	7	8
Start	Reserved	Switch command	Active upload	Reserved	Reserved	Reserved	Reserved	Checksum
0xFF	0x01	0x78	0x40	0x00	0x00	0x00	0x00	0x47

To read gas concentration：

0	1	2	3	4	5	6	7	8
Start	Reserved	Command	Reserved	Reserved	Reserved	Reserved	Reserved	Checksum
0xFF	0x01	0x86	0x00	0x00	0x00	0x00	0x00	0x79

To return:

0	1	2	3	4	5	6	7	8
Start	Command	Concentration (High byte) （ug/m3）	Concentration (low byte) （ug/m3）	Reserved	Reserved	Concentration (High byte) （ppb）	Concentration (low byte) （ppb）	Checksum
0xFF	0x86	0x00	0x2A	0x00	0x00	0x00	0x20	0x30

Gas concentration = concentration (high byte)*256 + concentration (low byte)

Checksum calibration

/**********

```
*Function name：unsigned char FucCheckSum(uchar *i,ucharln)

*Function description：checksum calibration[Take Not(Byte1+Byte2+…Byte7) +1]

*Note：Take Not(Byte1+Byte2+…ByteX (X>2)

**********************************************************************/

unsigned char FucCheckSum(unsigned char *i, unsigned char ln)

{

    unsigned char j, tempq=0;

    i+=1;

    for(j=0; j<(ln-2); j++)

    {

        tempq+=*i;

        i++;

    }

    tempq=(~tempq)+1;

    return(tempq);

}
```

Notes

- Avoid changing or moving sensor on the module.
- Avoid moving or changing electronic elements on PCB.
- Avoid exposure to organic vapour, organic solvent、high gas concentration.
  Protect from excessive vibration and shock.

PROSENSE

普 晟 PROSENSE **ProSense Technologies Co., Ltd.**

Add: Building4, Lianjian S&T Park, Longhua District, Shenzhen, China;
Tel: +86 755 3669 0079 Web: www.szprosense.com
Email: sales@szprosense.com