Brief Introduction

FC0-H2S-100 H2S Sensor from ProSense works on the proven fuel cell technology and responds directly to the volume concentration of H2S. FC0-H2S-100 realizes the detection of H2S by the reaction occurred on the working electrode of the micro fuel cell, during which the current generated is proportional to the concentration of H2S. FC0-H2S-100 is perfect for application powered by battery because fuel cell realizes gas detection without power consumption.



Feature

*0 power consumption

* High precision& sensitivity

* Up to 125℃

* Extra long service life

* Selective detection

*Fast response

*Excellent repeatability and stability

Application

Industrial H_2S Detection

Portable devices

Energy storage system

Li battery factory

Li battery warehouse

Electrical vehicle

…..

Technical Specification

Item	Technical Specification
Principle	Micro Fuel Cell
Range	0-100ppm
Max Overload	200ppm
Sensitivity	50±20(nA/ppm)
Response Time(T90)	＜30Sec
Detection Limit（20℃）	3ppm
Accuracy	±4ppm or ±15% whichever is greater
Repeatability	3%
Linearity	linear
Temperature	-40℃～125℃
Pressure	1atm±10％
Humidity	10％－90％(non condensing)
Lifetime	15 years in air
Warranty Period	24 months
Weight	3g

Dimensions

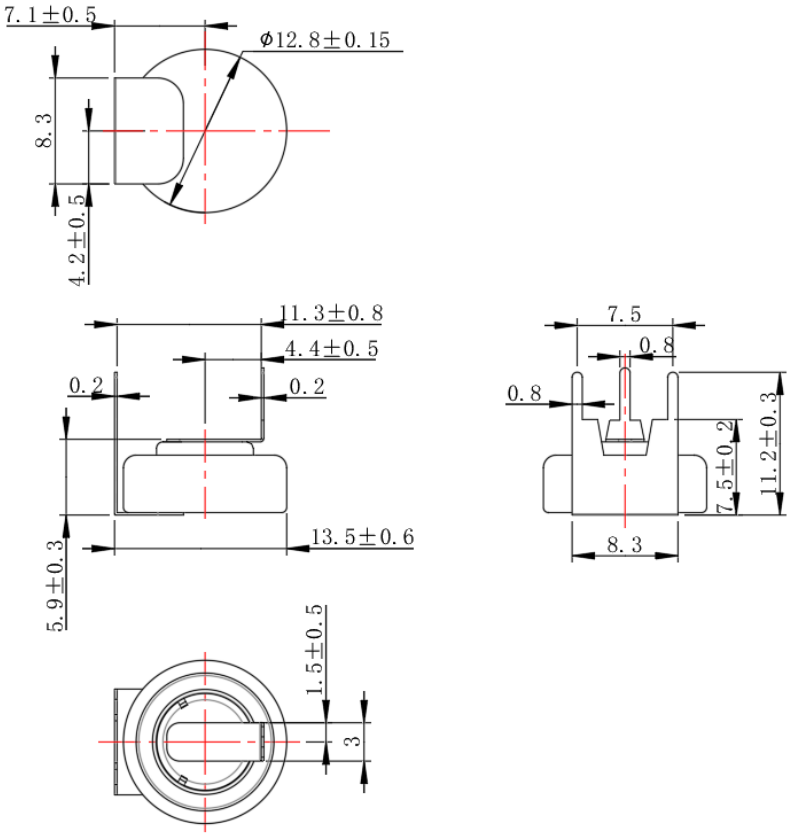

Notes：1 All dimensions in mm

2 All tolerances ±0.15mm unless otherwise stated

Precautions

1 .The sensor should be prevented from organic solvents or corrosive gases

2 .The sensor should not be stored in dusty, dirty areas and anaerobic environment

3 .The sensor must not be exposed to very high concentration of the analyte permanently

4 .Excessive shock or vibration should be prevented to avoid internal damage

普 晟 PRO SENSE **ProSense Technologies Co., Ltd.**

Add: Building4, Lianjian S&T Park, Longhua District, Shenzhen, China;

Tel: +86 755 3669 0079 Web: www.szprosense.com

Email: sales@szprosense.com