PS-H2-5000 Hydrogen Module

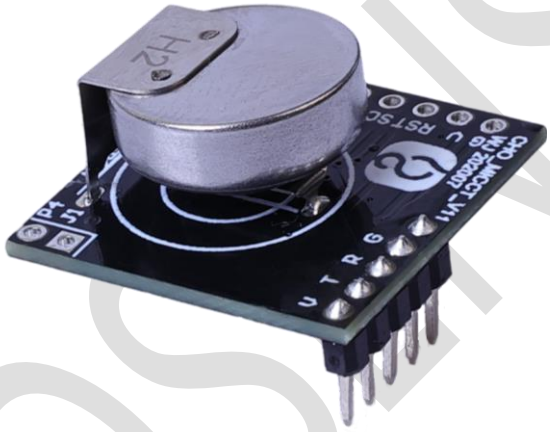

PROSENSE

ProSense Technologies Co., Ltd.

Brief Introduction

PS-H2-5000 hydrogen module, works on the proven fuel cell technology, combines fuel cell technology with precise electronic technique, converting the hydrogen content into PPM directly. Once hydrogen arrives at working electrode (anode) it is oxidized instantaneously to generate an electrical signal which is proportional to the hydrogen concentration. The electrical signal is then acquired and processed by microprocessor into a PPM value and is output by standard digital signal. PS-H2-5000 is pre-calibrated in the factory and can be integrated into your system directly.

Typical Applications

Factory for Li Battery

Charging Station for Li Battery

Warehouse for Li Battery

Energy Storage System

Electrical Vehicle

... …

Key Features

Low power consumption

High stability and repeatability

High precision

Fast response

Long service life

Anti-poisoning

Diagram

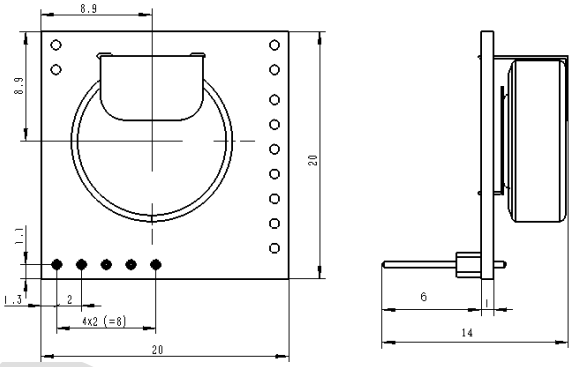

Definition of Pins

PIN	DEFINITION
Pin1	NC
Pin2	GND
Pin3	TXD
Pin4	RXD
Pin5	Vin(5V)

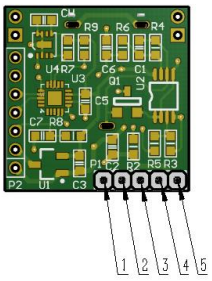

Technical Specification

MODEL	PS-H2-5000
Detection Principle	Fuel Cell
Detectable Gas	H2
Detection Range	0-5000ppm
Overload	10000ppm
Input Voltage	4.5-7V
Response Time (T90)	<60S
Accuracy	±3% FS（25±3℃）
Detection Limit	10ppm
Repeatability	3%
Linearity	Linearity
Operating temperature range	-40℃～70℃
Operating pressure range	1atm±10%
Operating Humidity Range	10%－90%RH（non-condensing）
Lifetime	10 years
Warranty Period	12 months
Weight	4g
Poisoned by Silicone	None

Cross Sensitivity

Interference Gas	Concentration of Interference Gas(ppm)	Concentration of H2(ppm)
Alcohol	1000	＜10ppm

Communication Protocol

- **General Settings**

Module makes use of serial communication.
Communication configuration parameters are:

PROSENSE

Baud rate	9600
Data bits	8 bits
Stop bit	1 bit
Parity bit	None

➢ **Communication Command**

There are two communication types: active upload type and Q&A type. The default type is active upload and it sends gas concentration once every second. Commands are as follow:

0	1	2	3	4	5	6	7	8
Start	Gas	Unit ppb	No decimal byte	Concentration (High byte)	Concentration (low byte)	Full range (high byte)	Full range (low byte)	Check sum
0xFF	H2=0x17	Ppb=0x04	0x00	0x00	0x25	0xXX	0xXX	0x25

Gas concentration = concentration (high byte)*256 + concentration (low byte)

Switch to Q&A mode：

0	1	2	3	4	5	6	7	8
Start	Reserved	Switch command	Q&A	Reserved	Reserved	Reserved	Reserved	Checksum
0xFF	0x01	0x78	0x41	0x00	0x00	0x00	0x00	0x46

Switch to active upload mode：

0	1	2	3	4	5	6	7	8
Start	Reserved	Switch command	Active upload	Reserved	Reserved	Reserved	Reserved	Checksum
0xFF	0x01	0x78	0x40	0x00	0x00	0x00	0x00	0x47

To read gas concentration：

0	1	2	3	4	5	6	7	8
Start	Reserved	Command	Reserved	Reserved	Reserved	Reserved	Reserved	Checksum
0xFF	0x01	0x86	0x00	0x00	0x00	0x00	0x00	0x79

To return:

0	1	2	3	4	5	6	7	8
Start	Command	Concentration (High byte) （ug/m3）	Concentration (low byte) （ug/m3）	Reserved	Reserved	Concentration (High byte) （ppb）	Concentration (low byte) （ppb）	Checksum
0xFF	0x86	0x00	0x2A	0x00	0x00	0x00	0x20	0x30

Gas concentration = concentration (high byte)*256 + concentration (low byte)

Checksum calibration

/**********

```
*Function name：unsigned char FucCheckSum(uchar *i,ucharln)

*Function description：checksum calibration[Take Not(Byte1+Byte2+…Byte7) +1]

*Note：Take Not(Byte1+Byte2+…ByteX (X>2)

**********************************************************************/

unsigned char FucCheckSum(unsigned char *i, unsigned char ln)

{

    unsigned char j, tempq=0;

    i+=1;

    for(j=0; j<(ln-2); j++)

    {

        tempq+=*i;

        i++;

    }

    tempq=(~tempq)+1;

    return(tempq);

}
```

Notes

- Avoid changing or moving sensor on the module.
- Avoid moving or changing electronic elements on PCB.
- Avoid exposure to organic vapour, organic solvent、high gas concentration.
- Protect from excessive vibration and shock.

PROSENSE

ProSense Technologies Co., Ltd.

Add: Building4, Lianjian S&T Park, LonghuaDistrict,Shenzhen,China;

Tel: +86 755 3669 0079 Website:http://www.szprosense.com

Email: sales@szprosense.com