Brief Introduction

FC-CO-100 CO sensor from ProSense works on the proven fuel cell technology and responds directly to the volume concentration of CO. FC-CO-100 realizes the detection of CO by the reaction occurred on the working electrode of the micro fuel cell, during which the current generated is proportional to the concentration of CO. FC-CO-100 is perfect for application powered by battery because fuel cell realizes gas detection without power consumption.



Feature

*0 power consumption

*High precision

*High sensitivity

*High performance/cost ratio

*Wide linear range

*Fast response

*Excellent repeatability and stability

*Long service life

Application

Electric Vehicle

Energy storage industry

Smart home

Fire protection industry

Portable Device

Environmental protection

Industry safety

…..

Technical Specification

Item	Technical Specification
Principle	Micro Fuel Cell
Range	0-100ppm
Max Overload	200ppm
Sensitivity	5±1.5(nA/ppm)
Response Time(T90)	＜60Sec
Precison（25℃）	±3%F.S.
Repeatability	3%
Linearity	linear
Temperature	-40℃～70℃
Pressure	1atm±10％
Humidity	10％－90％ (non-condense)
Lifetime	10 years in air
Warranty Period	12 months
Weight	3g

PROSE

Dimensions

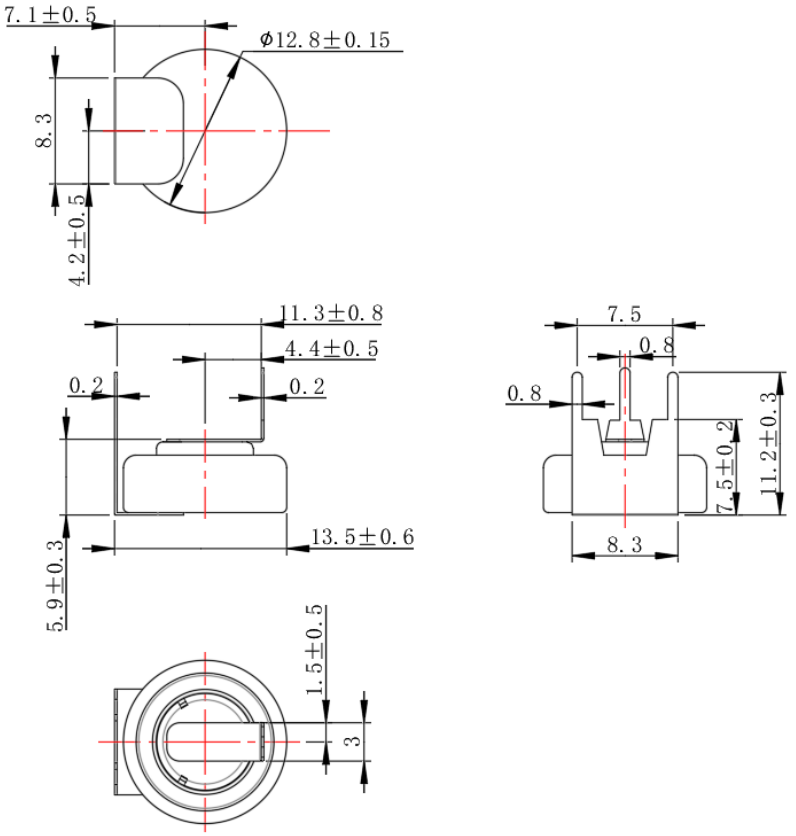

Notes： All dimensions in mm

Precautions

1 .The sensor should be prevented from organic solvents or corrosive gases
2 .The sensor should not be stored in dusty, dirty areas and anaerobic environment
3 .The sensor must not be exposed to very high concentration of the analyte permanently
4 .Excessive shock or vibration should be prevented to avoid internal damage

普 晟
PROSENSE **ProSense Technologies Co., Ltd.**

Add: Building4, Lianjian S&T Park, Longhua District, Shenzhen, China;
Tel: +86 755 3669 0079 Web: www.szprosense.com
Email: sales@szprosense.com