Specification for FC-H2-20000 Long-life hydrogen sensor

PROSENSE

Shenzhen ProSense Technologies CO.,Ltd.

Version V 2.0

Brief Introduction

The FC-H2-20000 Hydrogen Sensor from ProSense utilizes proven fuel cell technology to deliver accurate, real-time measurement of hydrogen volume concentration. Detection is achieved through a reaction at the working electrode of the micro fuel cell, generating a current directly proportional to the H2 concentration. Designed for battery-powered applications, the FC-H2-20000 offers zero power consumption during gas detection, making it an ideal solution for energy-efficient and safety-critical environments.

Features

* Zero power consumption
* High precision & sensitivity
* Anti-poisoning by silicone
* Fast response
* Excellent repeatability and stability
* 10 years lifetime
* Working temperature range
* UL2075 recognized

Applications

Electric Vehicle

Energy Storage System

Portable Gas Detector

Hydrogen Gas Station

Fire Protection Industry

Industry safety

Technical Specification

Item	Technical Specification
Principle	Micro Fuel Cell
Range	0-20000ppm
Max Overload	40000ppm
Sensitivity	0.4±0.2(nA/ppm)
Response Time(T90)	＜60Sec
Precision（25±3℃）	±300ppm or ±10% Whichever is greater
Repeatability	3%
Linearity	linear
Temperature	-40℃～70℃/85℃ /105℃ （high-temperature optional）
Pressure	1atm±10%
Humidity	10%－90% (non-condense)
Lifetime	10 years in air
Warranty Period	12 months
Weight	3g
Output at 1000ppm alcohol	＜30ppm

PROSENSE

Dimensions

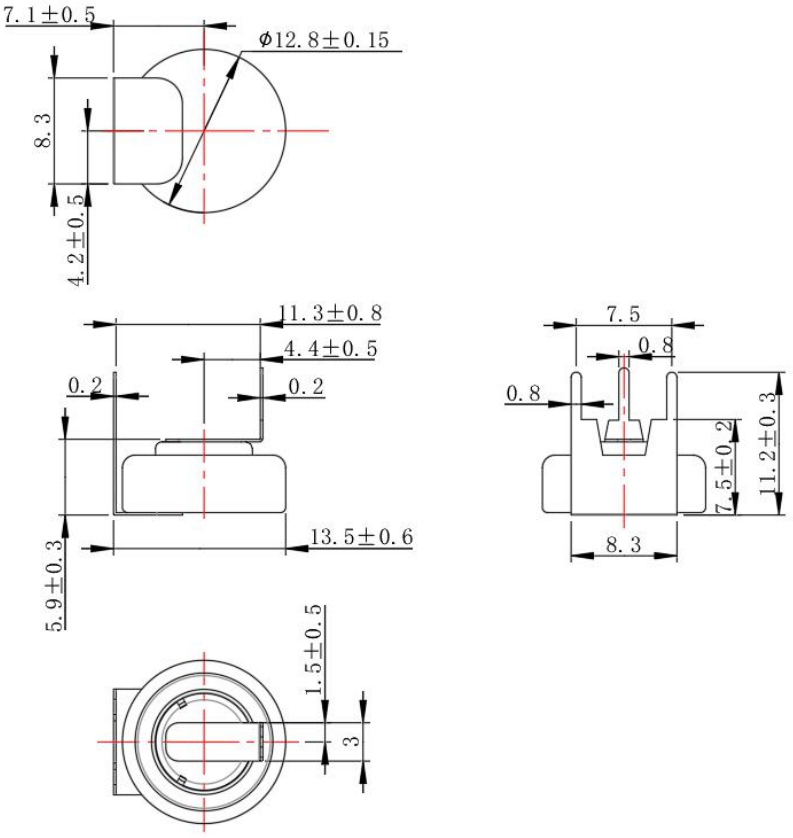

Notes： All dimensions in mm

Precautions

1. The sensor should be prevented from organic solvents or corrosive gases.
2. The sensor should not be stored in dusty, dirty areas and anaerobic environment.
3. The sensor must not be exposed to very high concentration of the analyte permanently.
4. Excessive shock or vibration should be prevented to avoid internal damage.

普晟 PROSENSE
ShenZhen ProSense Technologies Co. Ltd.
Add：Floor 1, buliding4, LianJian S&T Park, DaLang, LongHua district, ShenZhen,Chian
Tel：+86-755-36690079 Mobile：13510916915
Email：sales@szprosense.com Website：http://www.szprosense.com